USB FTDI Converters Data Sheet

USB RS232 RS485 Converters (C37 & C38)

C37(EX) C38(EX)



Features

- USB to UART or RS232/RS485 converter
- ESD protection for the RS485 data line
- Transmission speed up to 115200 bps
- Tx, Rx and power LED indicators
- Operating temperatures: -40°C to +75°C
- Compact size
- Dimensions: 55.4x20.3x11.85 mm
- 3 years warranty
- Customization of OEM is welcomed

Specifications

Redisage PN	C37	C38
Ports	UART	RS232/RS485
Expanders	**C37EX** USB-A adapter for UART	**C38EX** DSUB-A adapter for RS232
Power	< 1 W	
Frame ground protection	no	

Redisage PN		C37	C38
Baud rate		up to 115200 bps	
LED indicators		communication Tx, Rx and power	
RS485 termination		120 ohm Manually Enabled	
Connector	RS232/UART	3-pin terminal block max. 2.5 mm^2 wire	
	RS485	N/A	2-pin terminal block max. 2.5 mm^2 wire
Transmission distance	RS232/UART	max. 15 m at 115.2 kbps	
	RS485	N/A	max. 1,200 m at 9.6 kbps; max. 400 m at 115.2 kbps (Belden 9841 2P twisted-pair cable, if different cables are used, the transmission distance may change)
Mounting and enclosure		DIN rail, plastic PA - UL 94 V0, black/green	
Temperatures		-40°C to +75°C operating and storage	
Humidity		10 - 90% RH, non-condensing	
ESD protection		±4 kV contact discharge / ±8 kV air discharge	
Certification		CE, RoHS	

Variants

C37 - UART 3V3 USB FTDI Converter

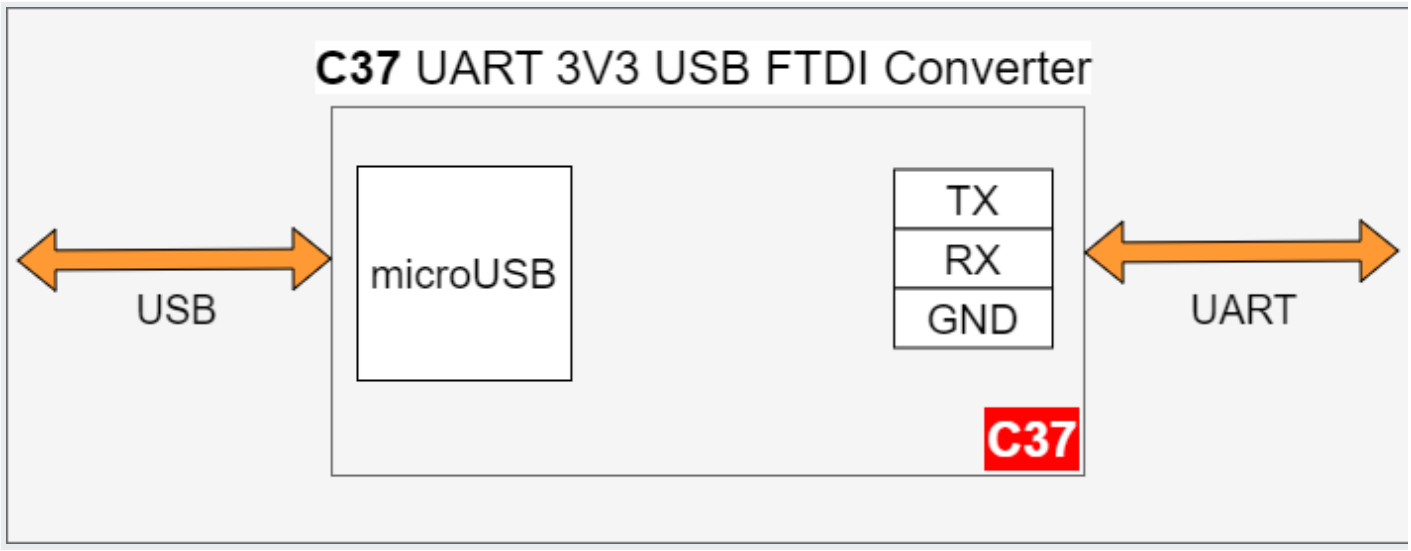

C38 - RS232/RS485 USB FTDI Converter

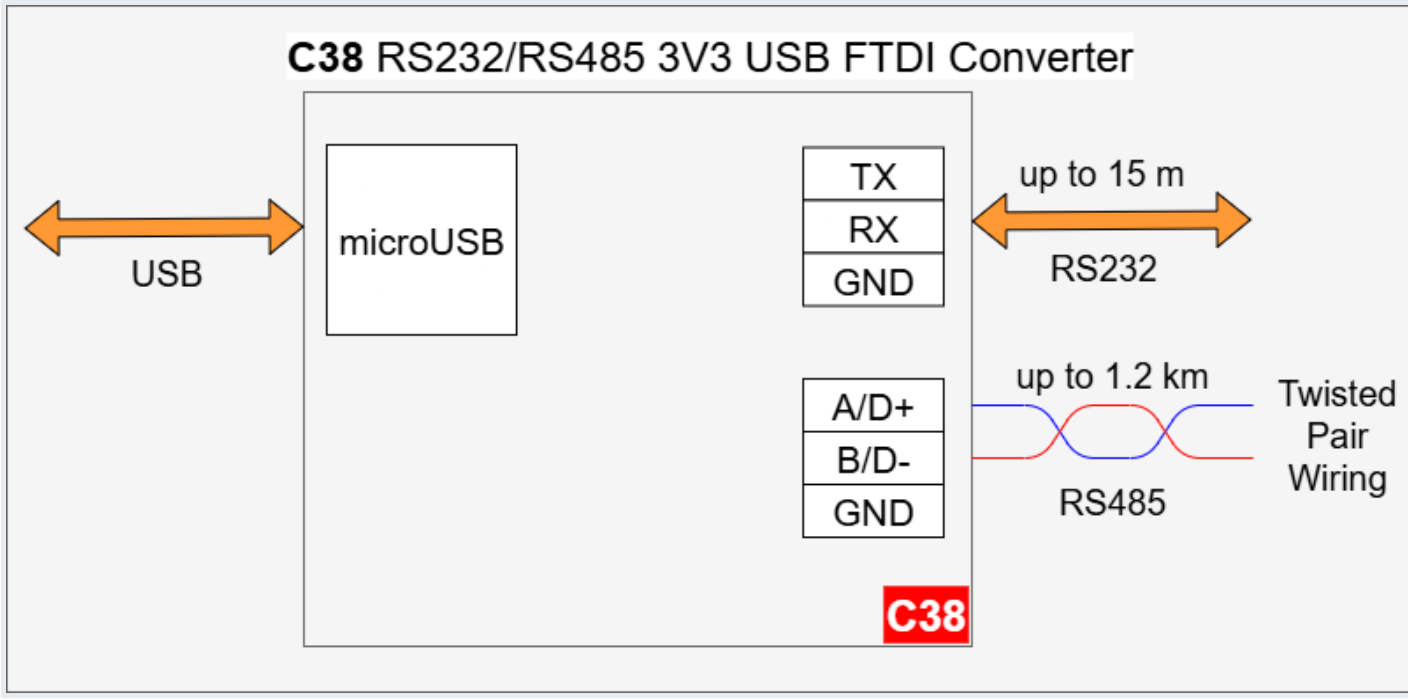

Jumpers

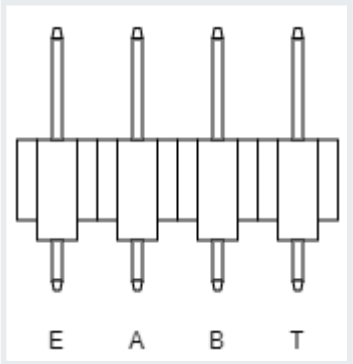

Jumper name	C38 jumpers
E	Echo Disable
A	Pull Up 523 ohm - A Line (RS485)
B	Pull Down 523 ohm - B Line (RS485)
T	120 ohm Termination

Pin assignments

Pin No.	C37	C38
1	NC	Tx RS232
2	VCC 3V3	Rx RS232
3	GND	GND
4	Tx UART 3V3	A RS485
5	Rx UART 3V3	B RS485

Accessories

C37(EX)	C38(EX)
	

Enclosure dimensions

Compact USB Enclosure
55.4 x 20.3 x 11.85
Units: mm

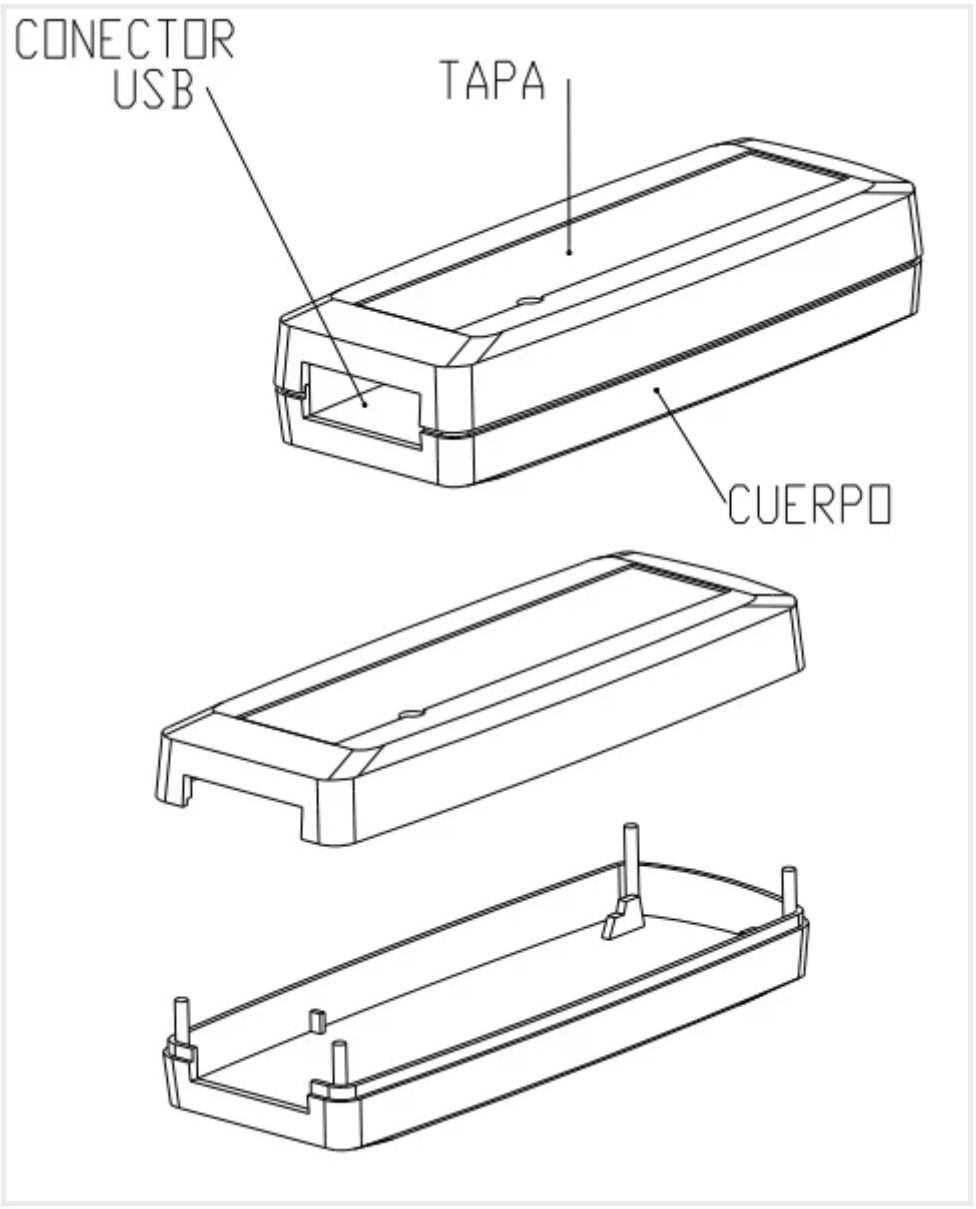

Additional notes

Related information and links		
Ordering information	Accessories	Similar products

Products family sample photo



https://redisage.com

DISCLAMER NOTES

ALL PRODUCT, PRODUCT SPECIFICATIONS AND DATA ARE SUBJECT TO CHANGE WITHOUT NOTICE TO IMPROVE RELIABILITY, FUNCTION OR DESIGN OR OTHERWISE.

Datasheet-ID:

SR-D

Created 2024-04-03 08:05:22 UTC
Updated 2025-09-02 06:31:16 UTC by Michał Grabski